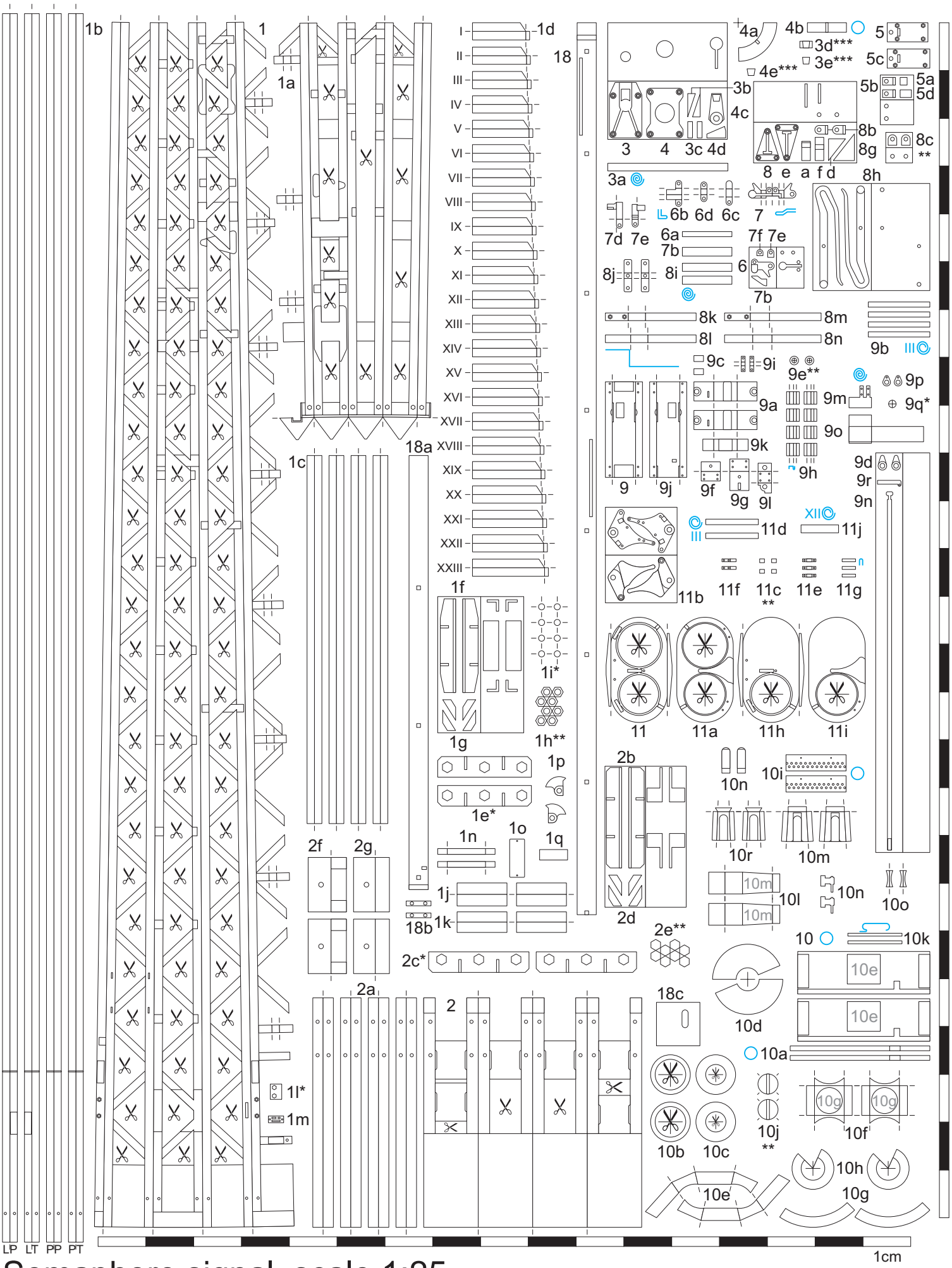

Semaphore signal, scale 1:25

Author: Paweł Adamowicz (http://pkprepo.net/), 2013-2014, selected rights reserved (cc) BY-NC-ND

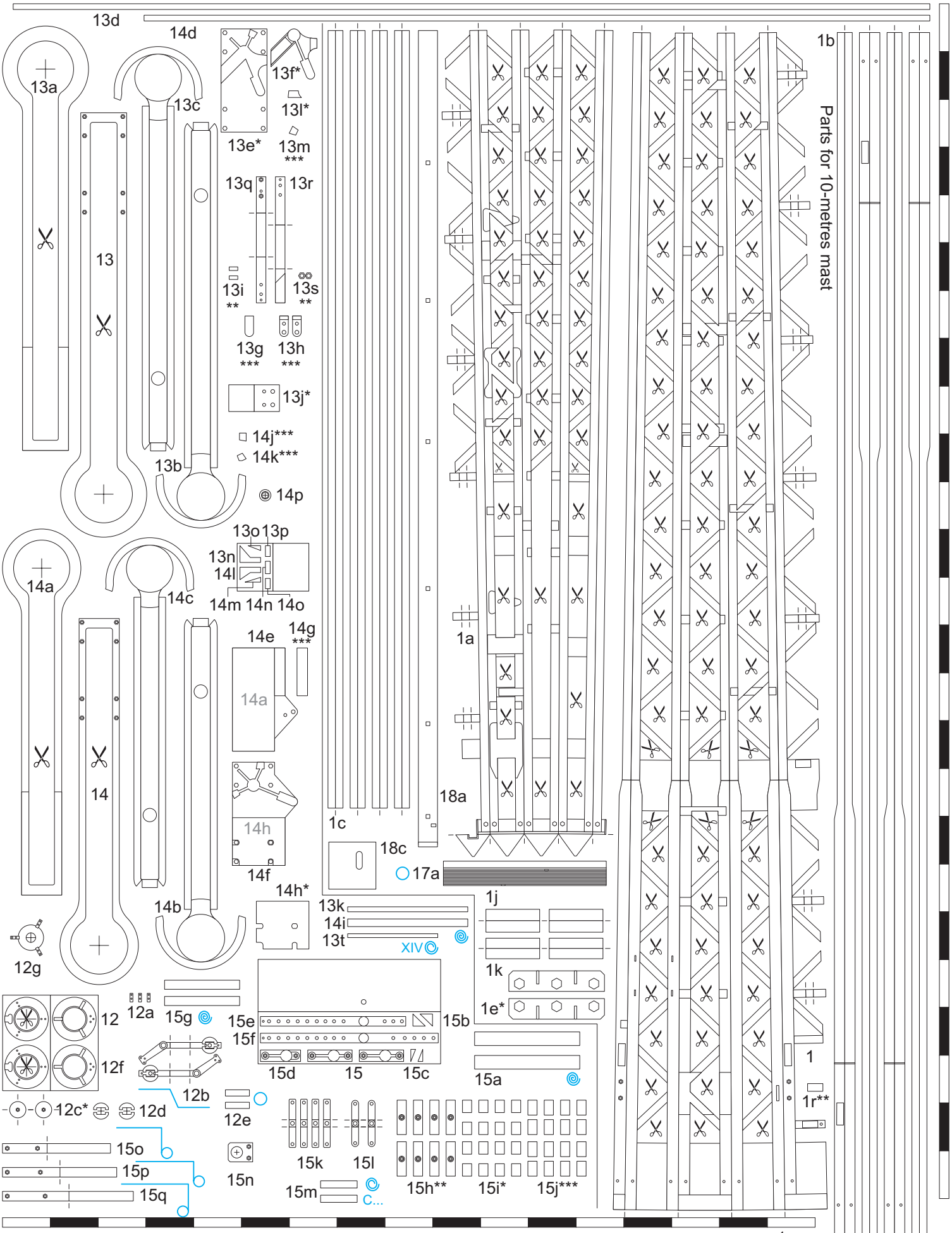

Semaphore signal, scale 1:25

Author: Paweł Adamowicz (http://pkprepo.net/), 2013-2014, selected rights reserved BY-NC-ND

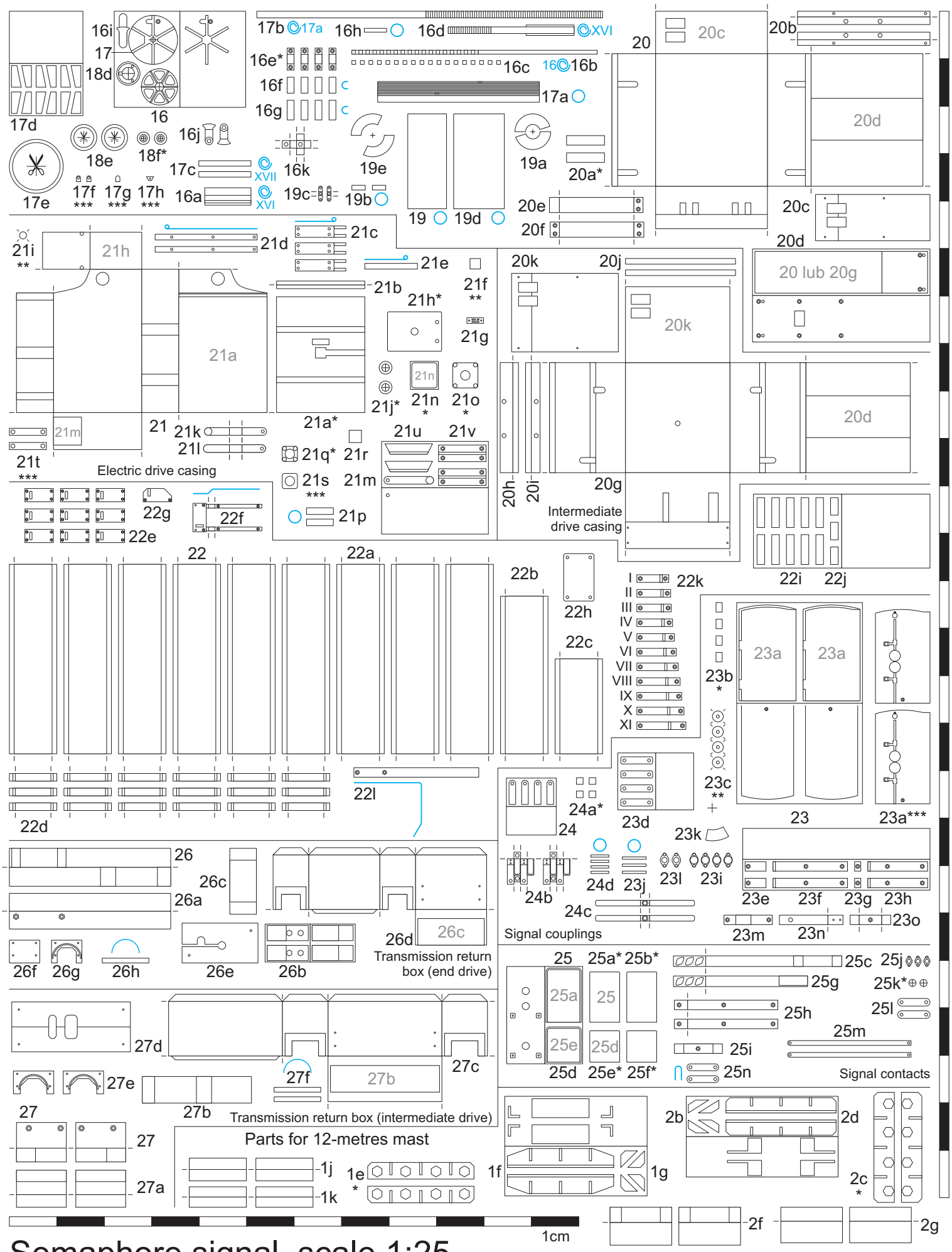

Semaphore signal, scale 1:25

Author: Paweł Adamowicz (http://pkprepo.net/), 2013-2014, selected rights reserved (cc) BY-NC-ND

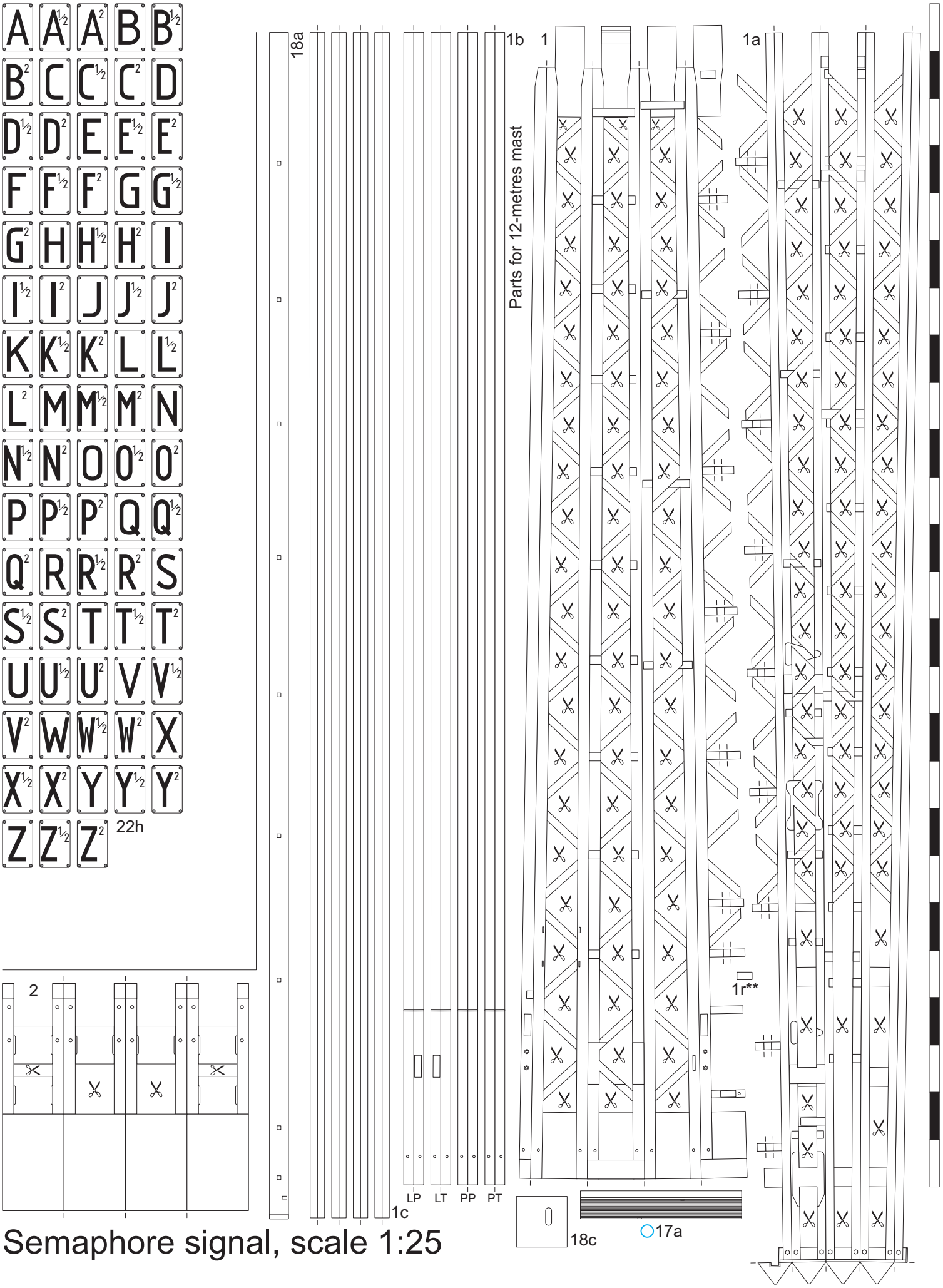

Semaphore signal, scale 1:25

Author: Paweł Adamowicz (http://pkprepo.net/), 2013-2014, selected rights reserved (cc) BY-NC-ND

Templates

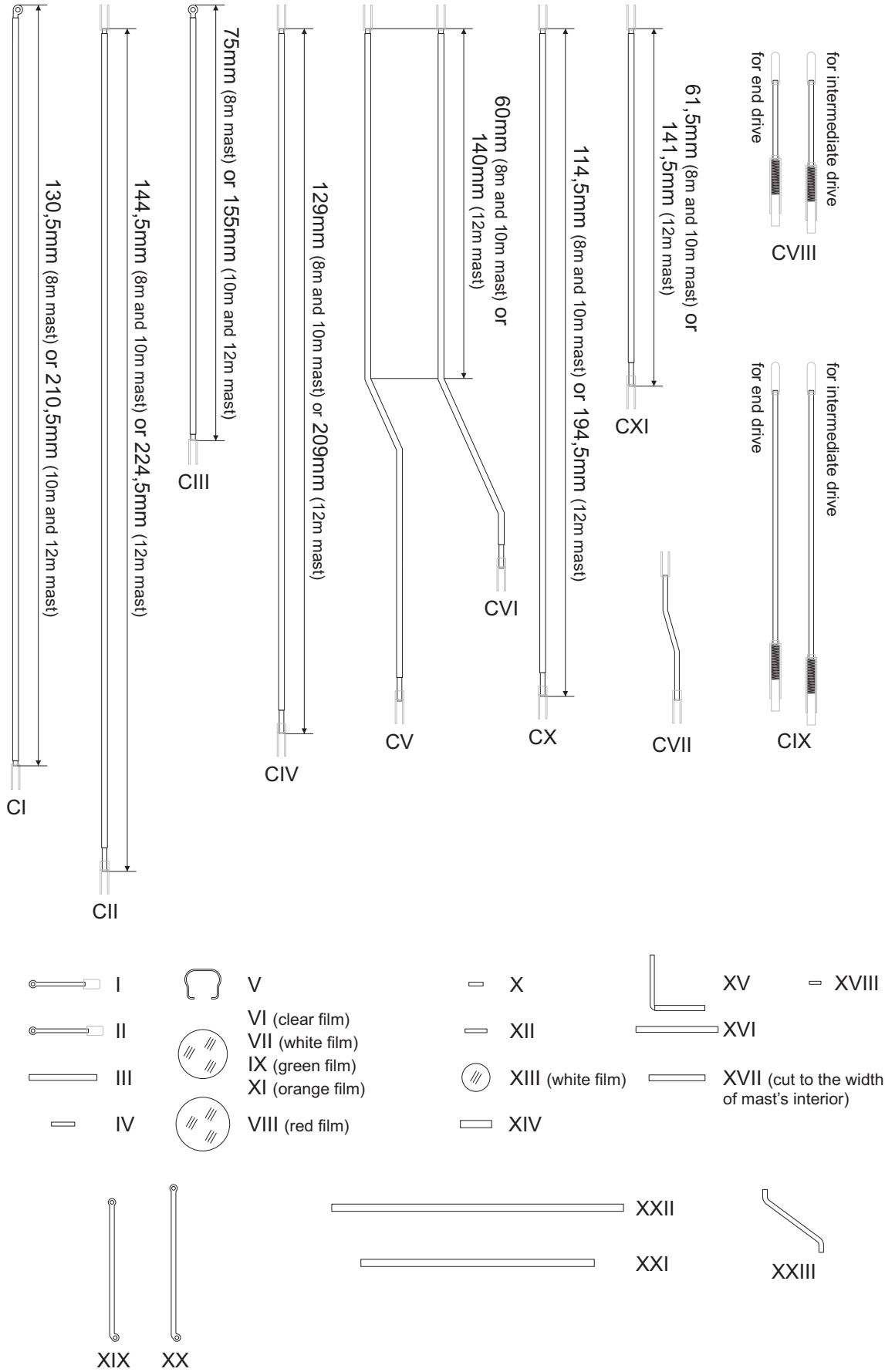

1cm

Semaphore signal, scale 1:25

Author: Paweł Adamowicz (http://pkprepo.net/), 2013-2014, selected rights reserved BY-NC-ND

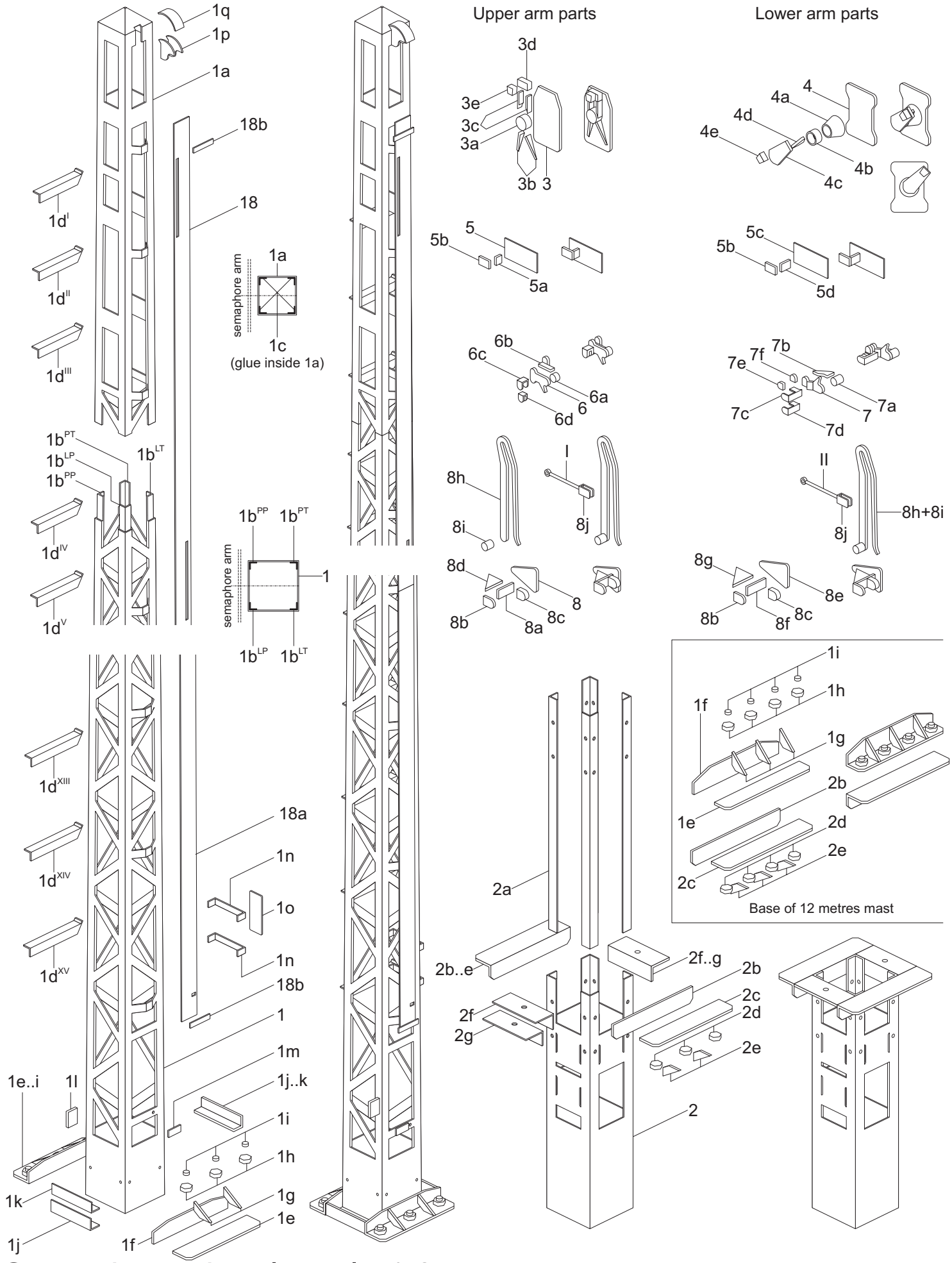

Semaphore signal, scale 1:25

Assembly manual 1/10

Author: Paweł Adamowicz (http://pkprepo.net/), 2013-2014, selected rights reserved BY-NC-ND

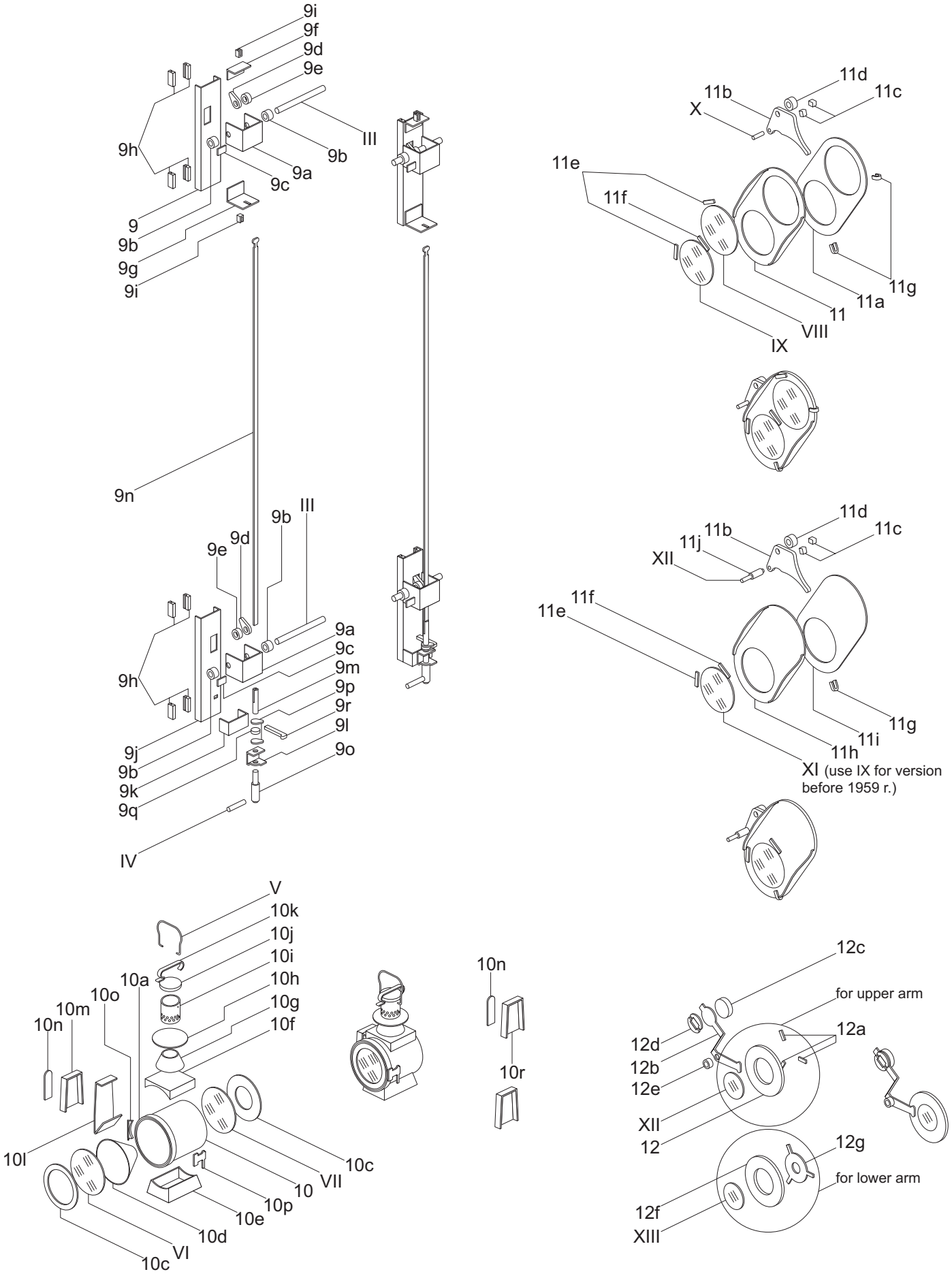

Semaphore signal, scale 1:25

Assembly manual 2/10

Author: Paweł Adamowicz (http://pkprepo.net/), 2013-2014, selected rights reserved BY-NC-ND

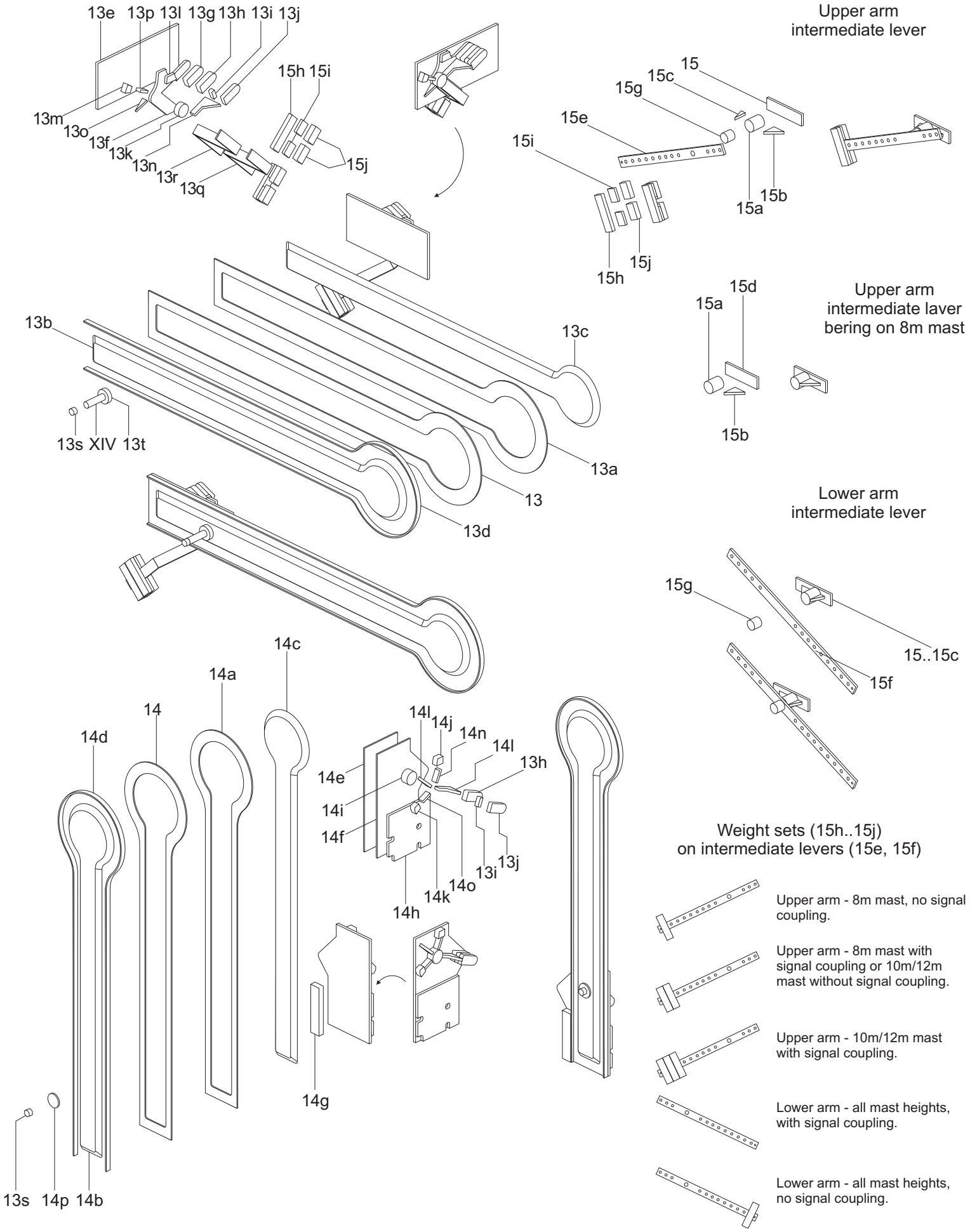

Semaphore signal, scale 1:25

Assembly manual 3/10

Author: Paweł Adamowicz (http://pkprepo.net/), 2013-2014, selected rights reserved BY-NC-ND

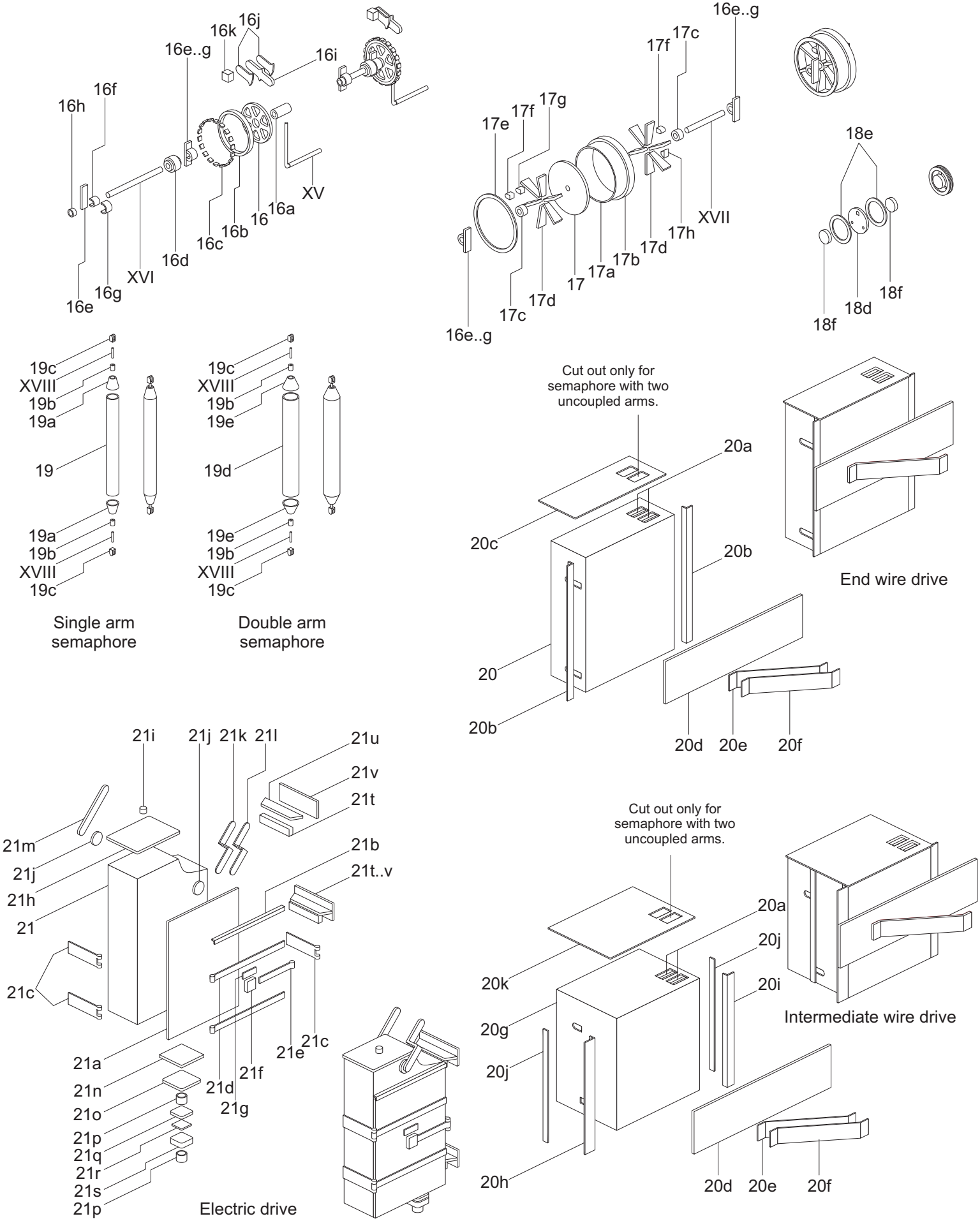

Semaphore signal, scale 1:25

Assembly manual 4/10

Author: Paweł Adamowicz (http://pkprepo.net/), 2013-2014, selected rights reserved CC BY-NC-ND

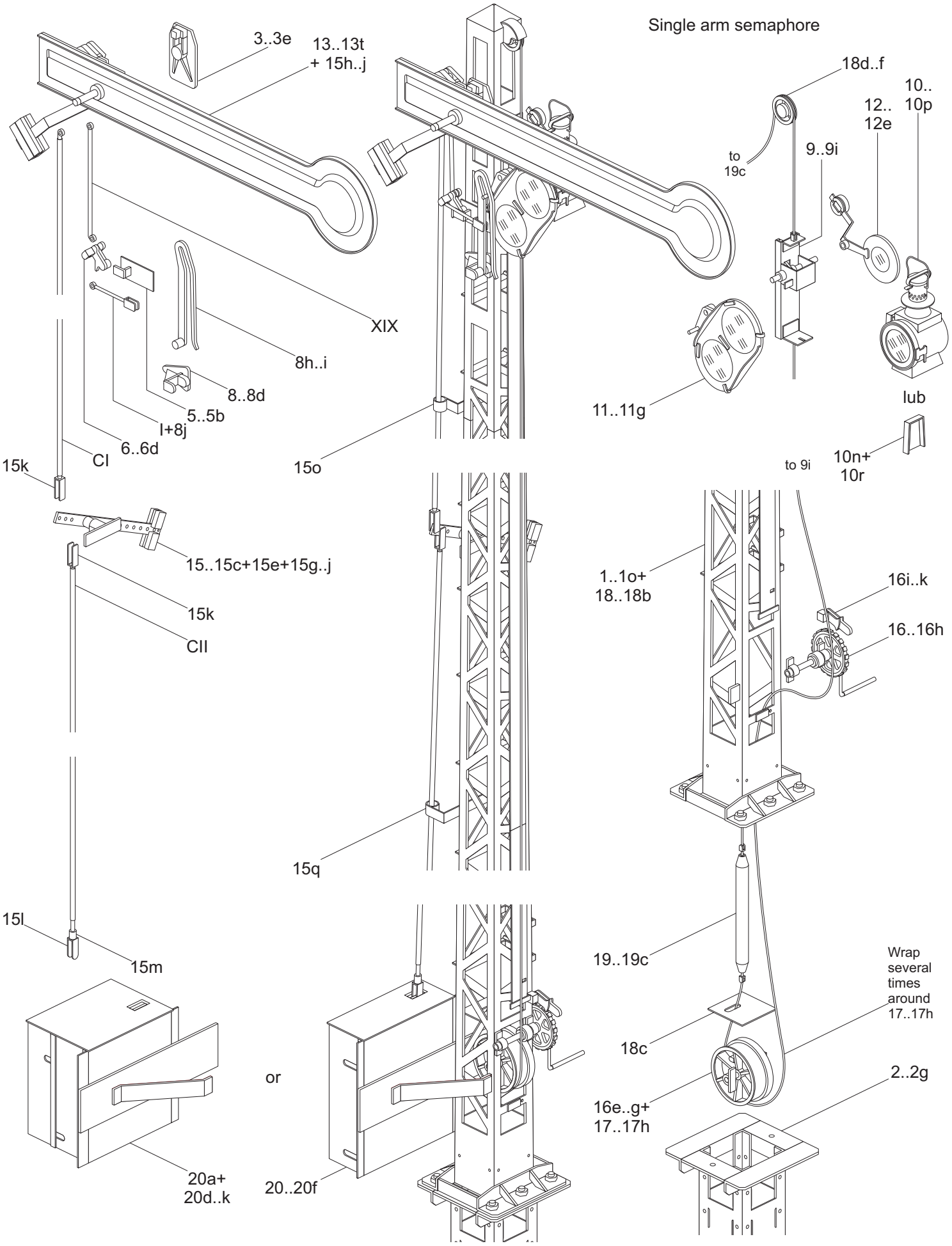

Semaphore signal, scale 1:25

Assembly manual 5/10

Author: Paweł Adamowicz (http://pkprepo.net/), 2013-2014, selected rights reserved BY-NC-ND

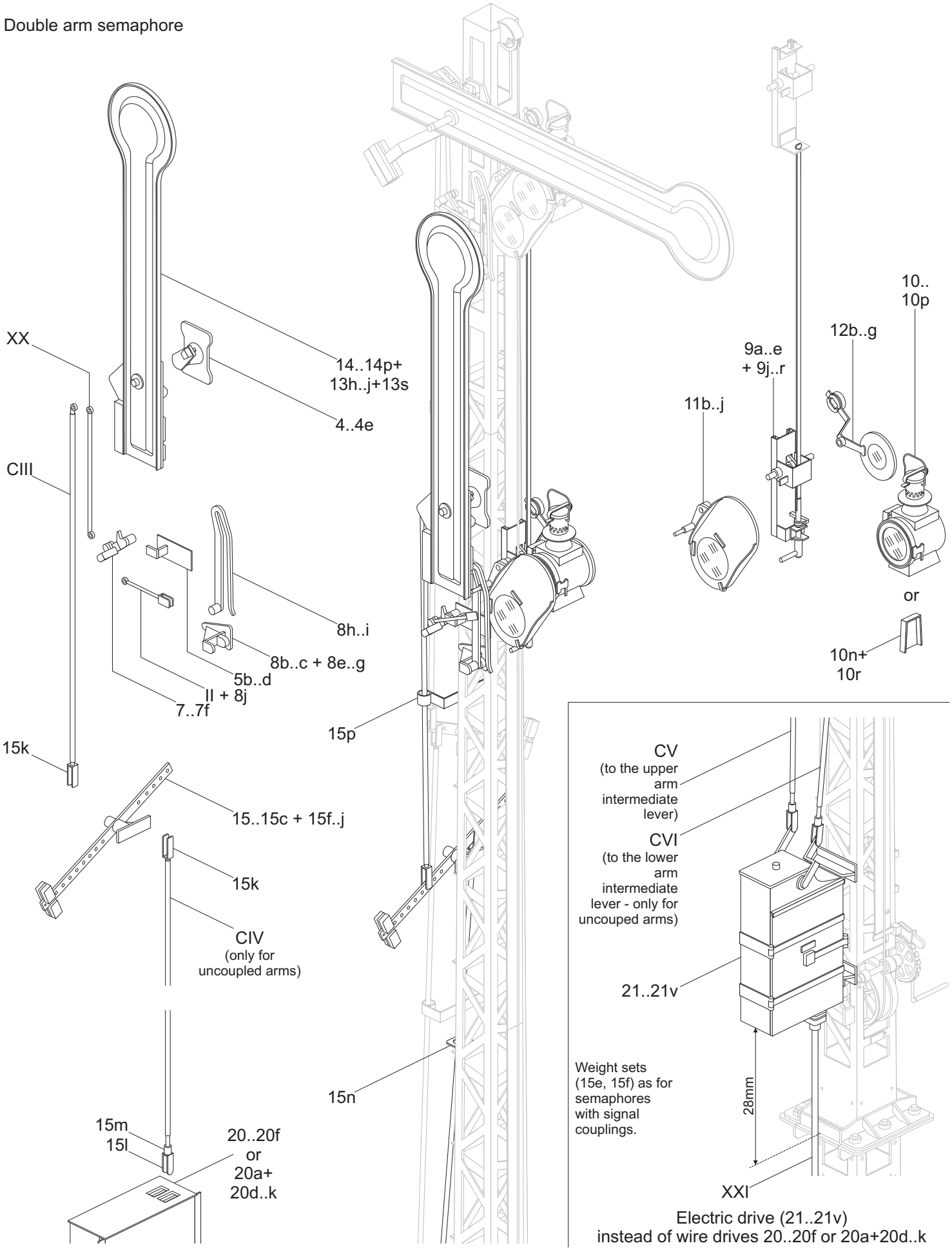

Semaphore signal, scale 1:25

Assembly manual 6/10

Author: Paweł Adamowicz (http://pkprepo.net/), 2013-2014, selected rights reserved BY-NC-ND

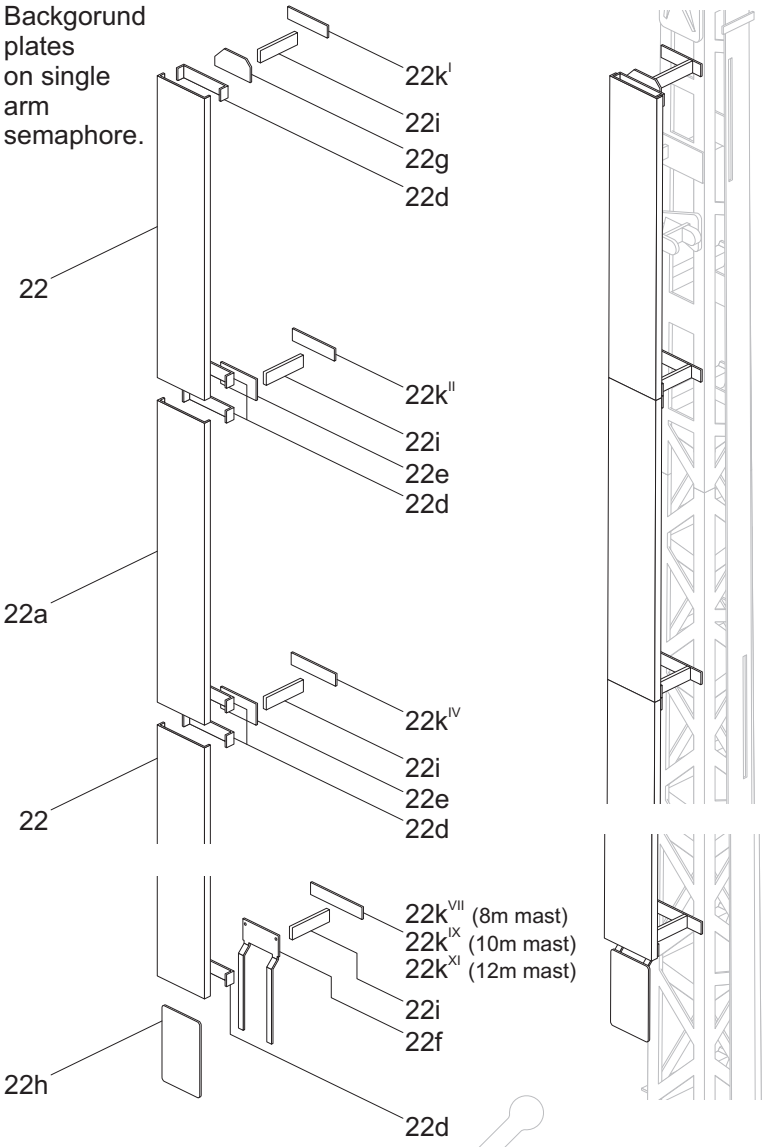

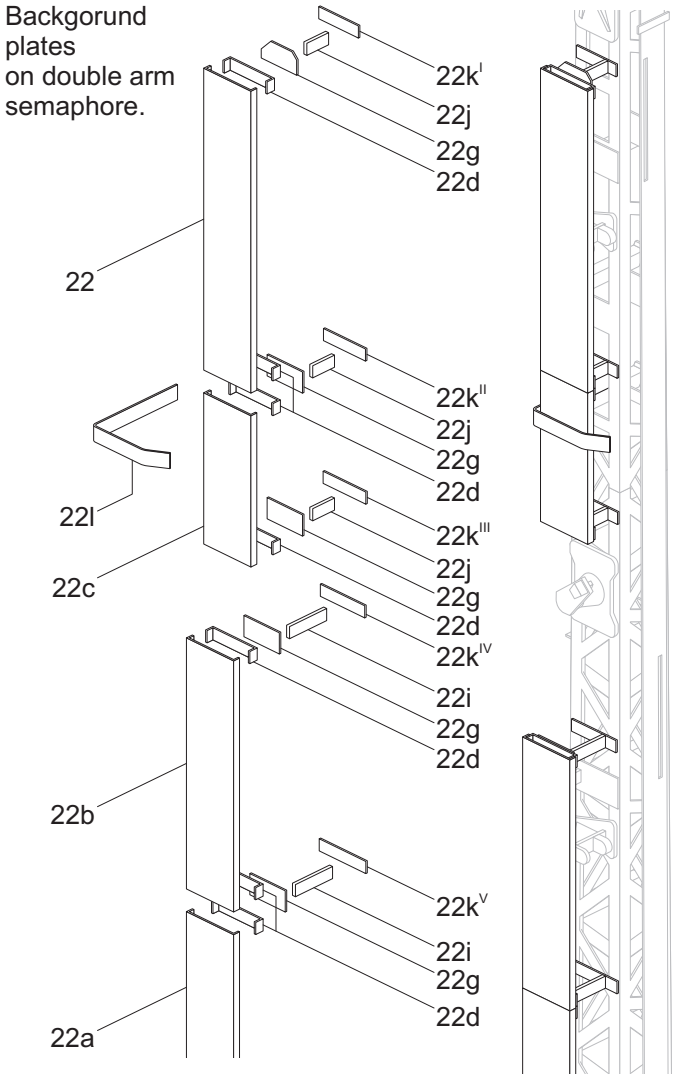

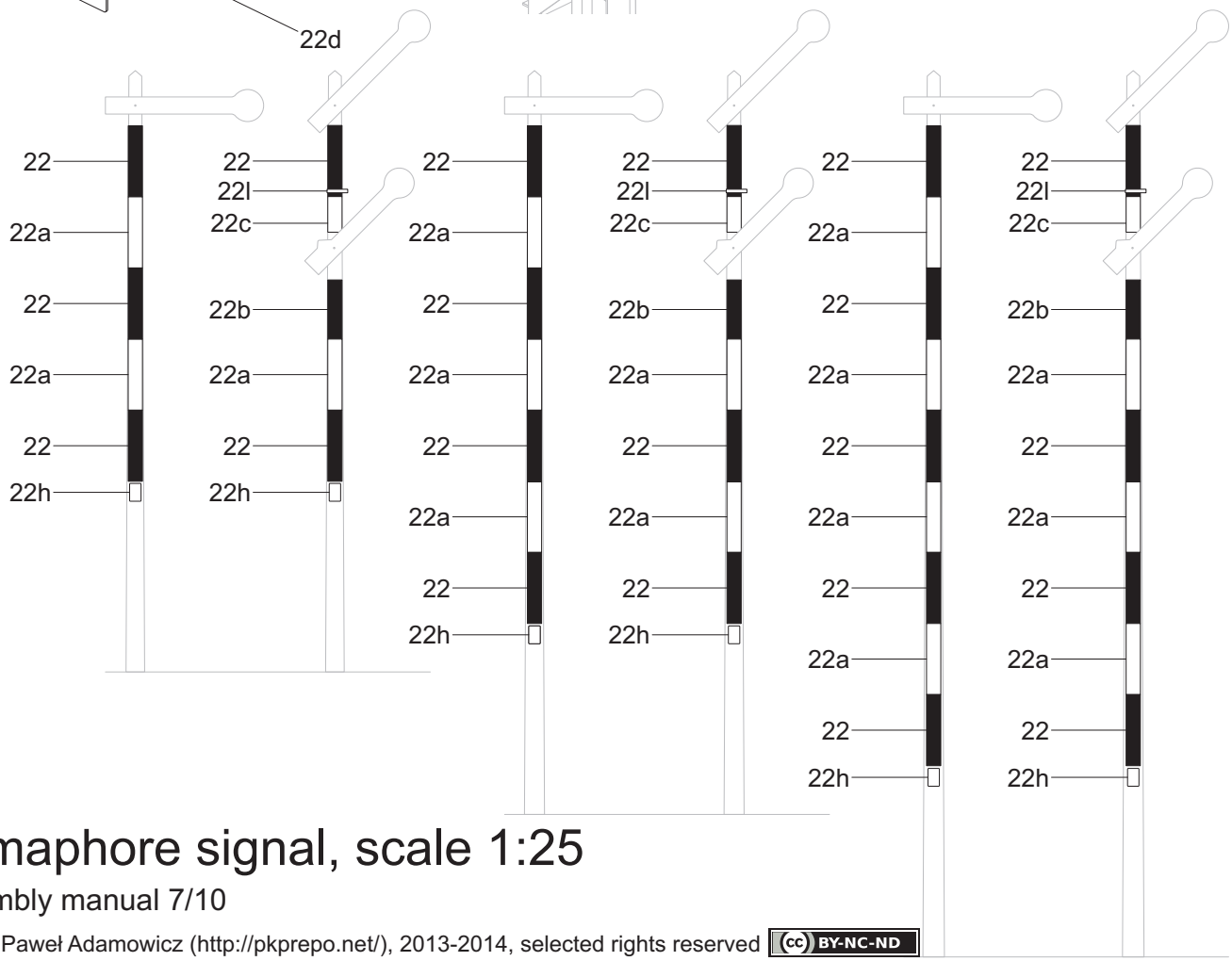

Semaphore signal, scale 1:25

Assembly manual 7/10

Author: Paweł Adamowicz (http://pkprepo.net/), 2013-2014, selected rights reserved (cc) BY-NC-ND

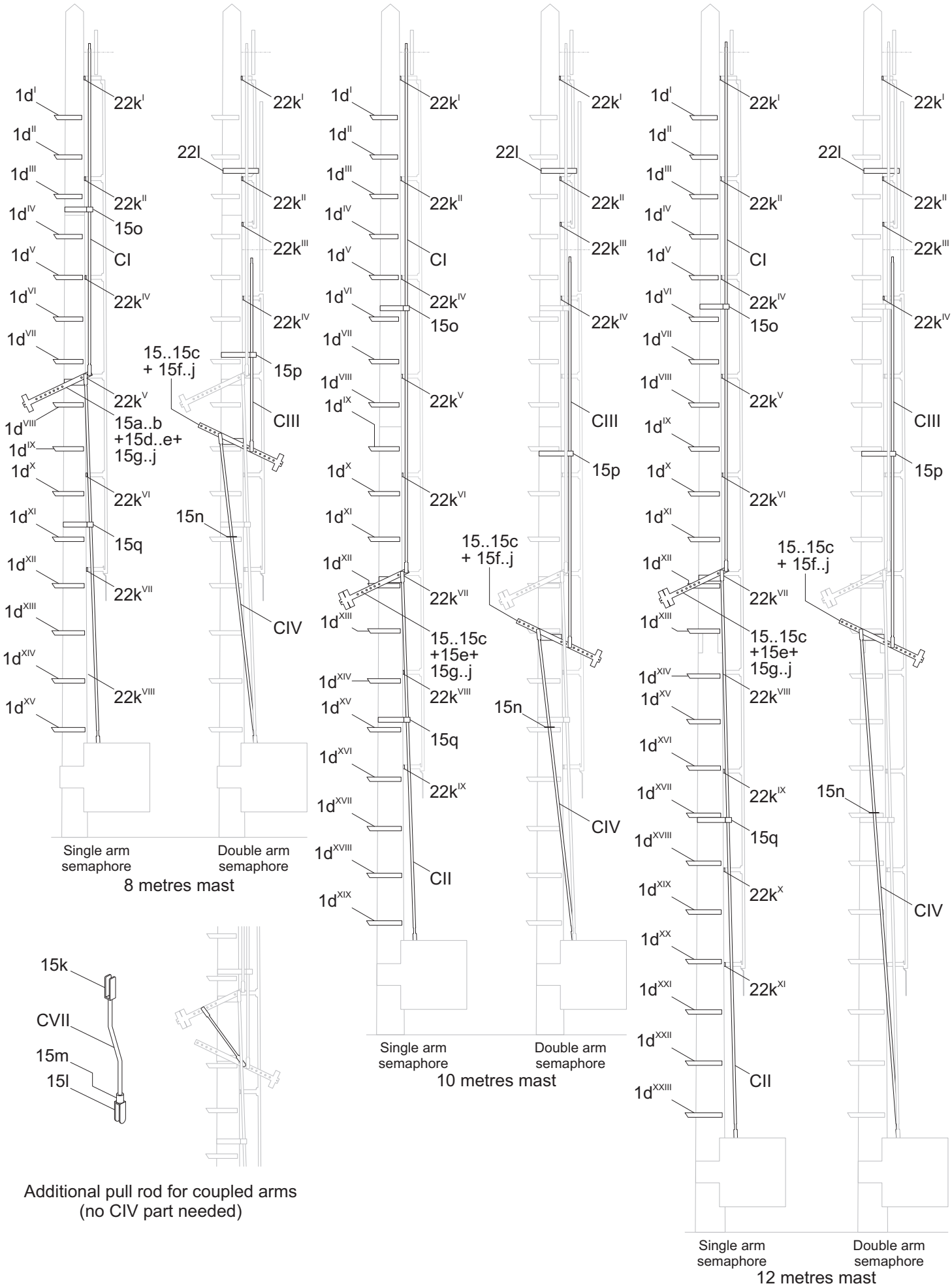

Semaphore signal, scale 1:25

Assembly manual 8/10

Author: Paweł Adamowicz (http://pkprepo.net/), 2013-2014, selected rights reserved BY-NC-ND

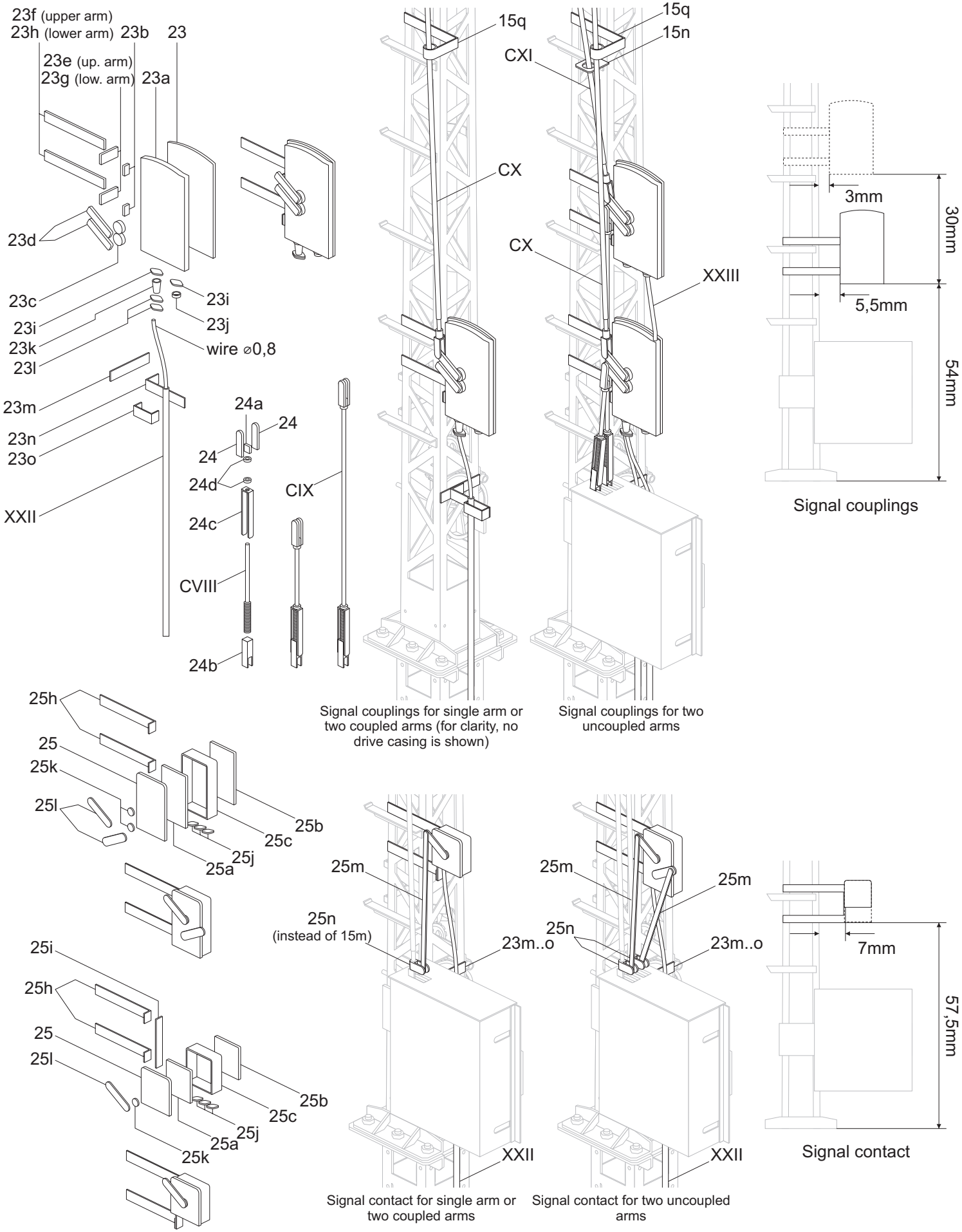

Semaphore signal, scale 1:25

Assembly manual 9/10

Author: Paweł Adamowicz (http://pkprepo.net/), 2013-2014, selected rights reserved BY-NC-ND

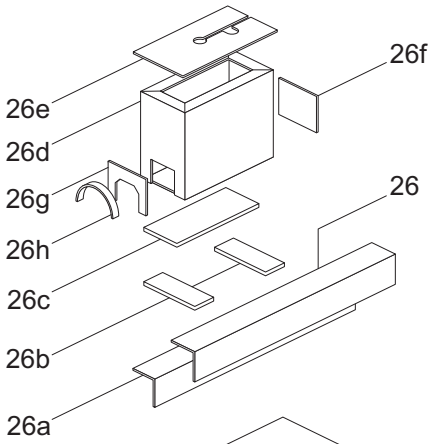

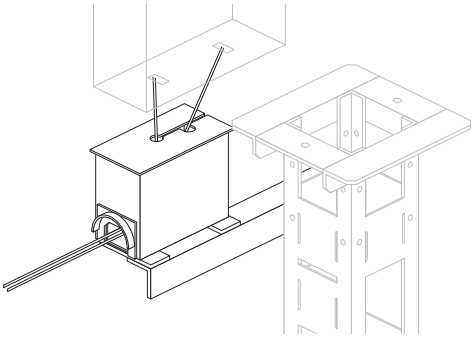

Transmission in front of semaphore

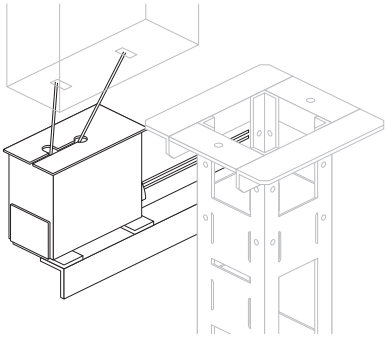

Transmission behind semaphore

Underground wire transmission's return box for end drive

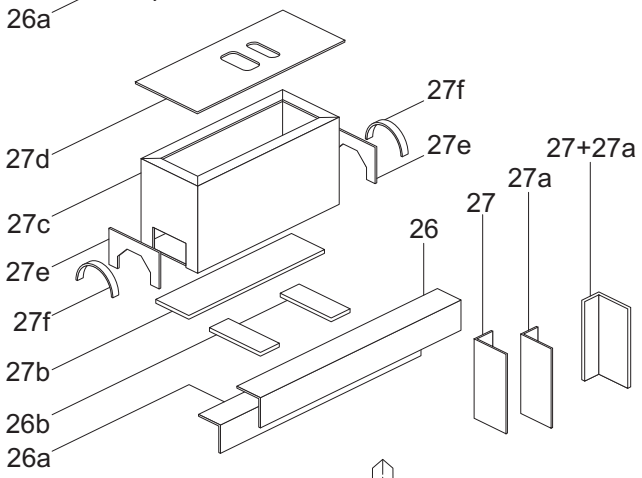

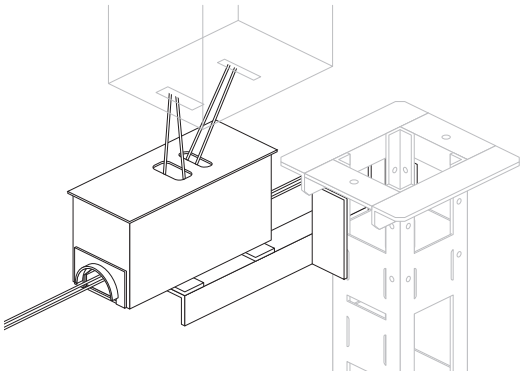

Underground wire transmission's return box for intermediate drive

Semaphore placement against loading gauge (between tracks and on the edge of track bed).

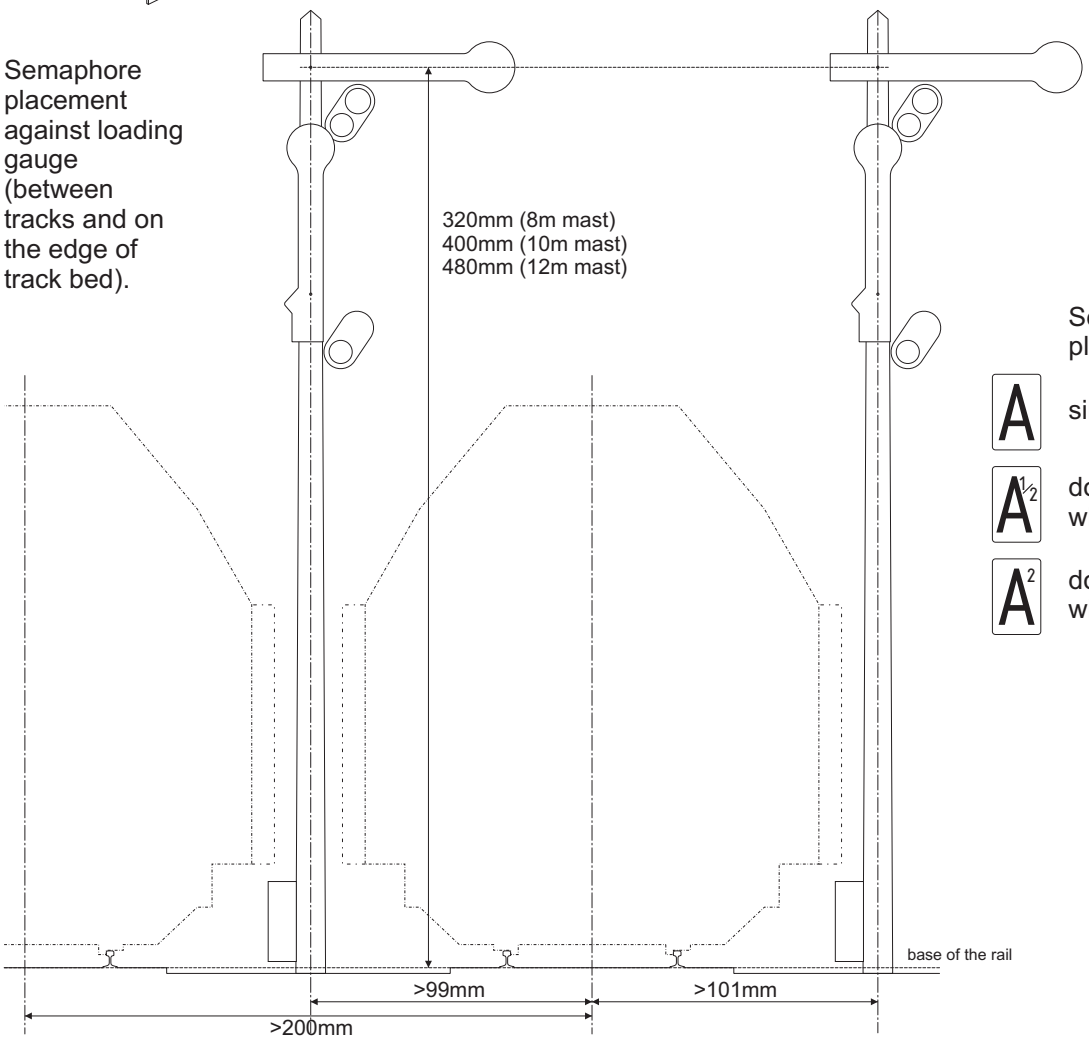

Semaphore designation plate (22h):

single arm semaphore

double arm semaphore with uncoupled arms

double arm semaphore with coupled arms

Semaphore signal, scale 1:25

Assembly manual 10/10

Author: Paweł Adamowicz (http://pkprepo.net/), 2013-2014, selected rights reserved BY-NC-ND