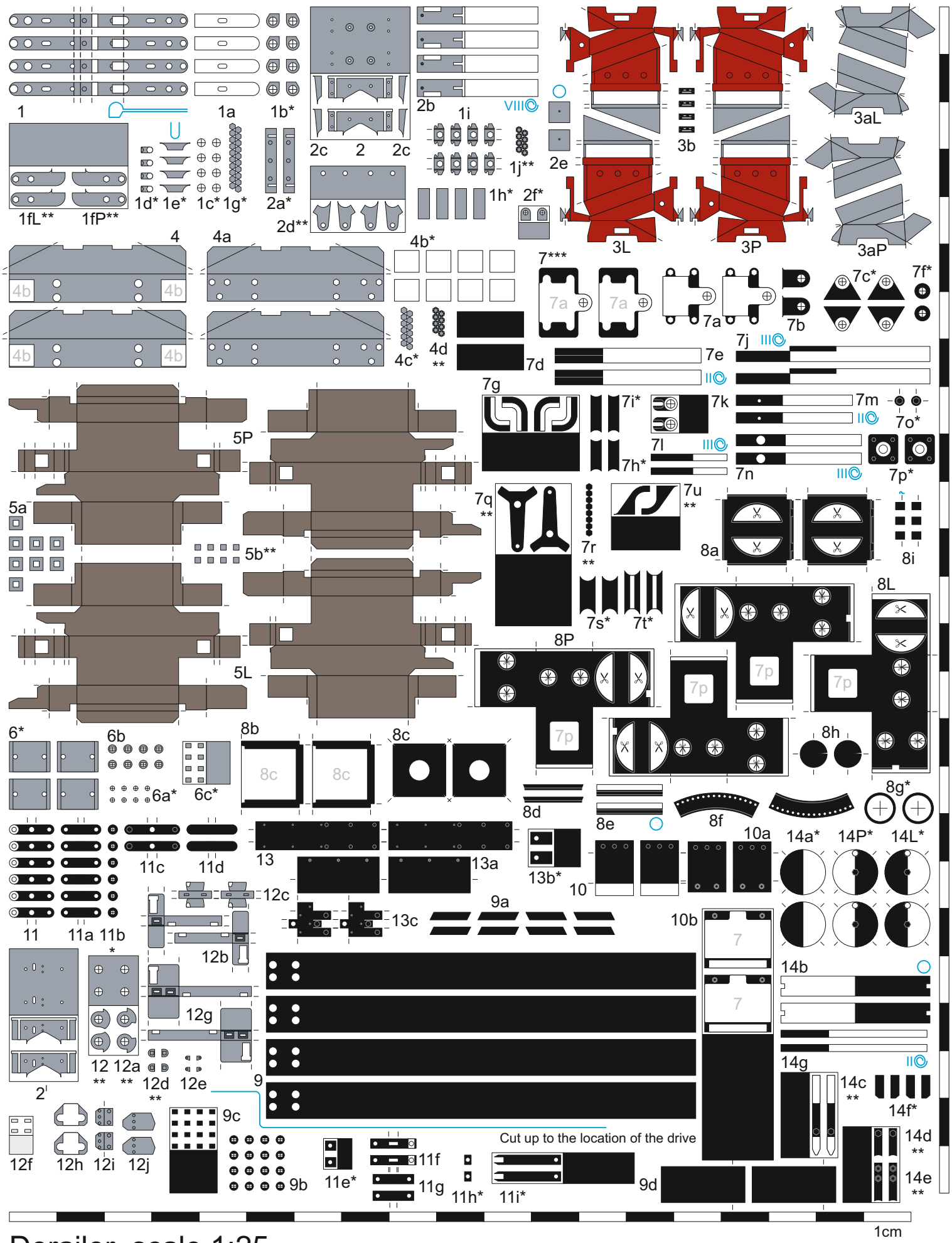

Derailer, scale 1:25

Author: Paweł Adamowicz (http://pkprepo.net/), 2021, selected rights reserved BY-NC-ND

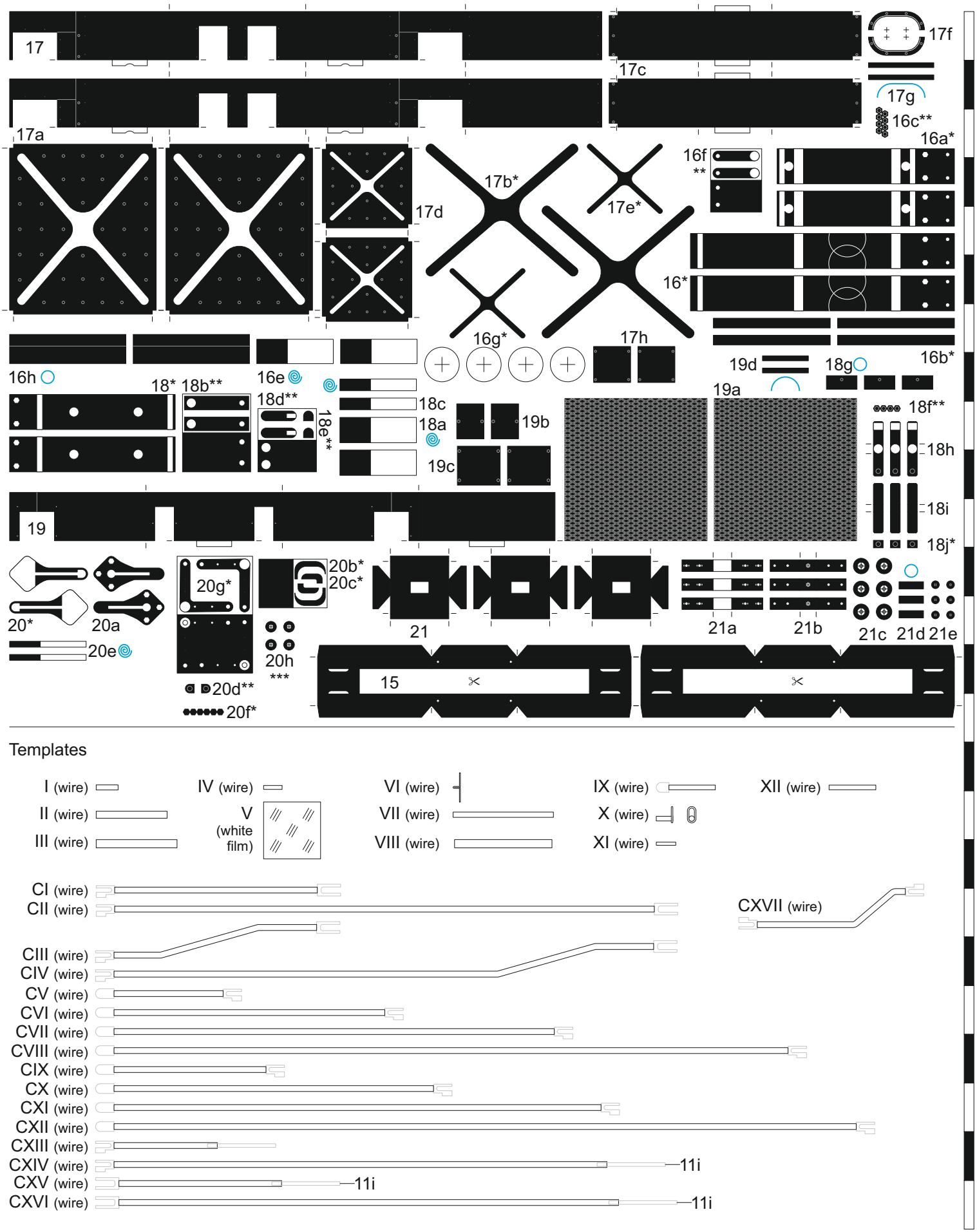

Derailer, scale 1:25

Author: Paweł Adamowicz (http://pkprepo.net/), 2021, selected rights reserved BY-NC-ND

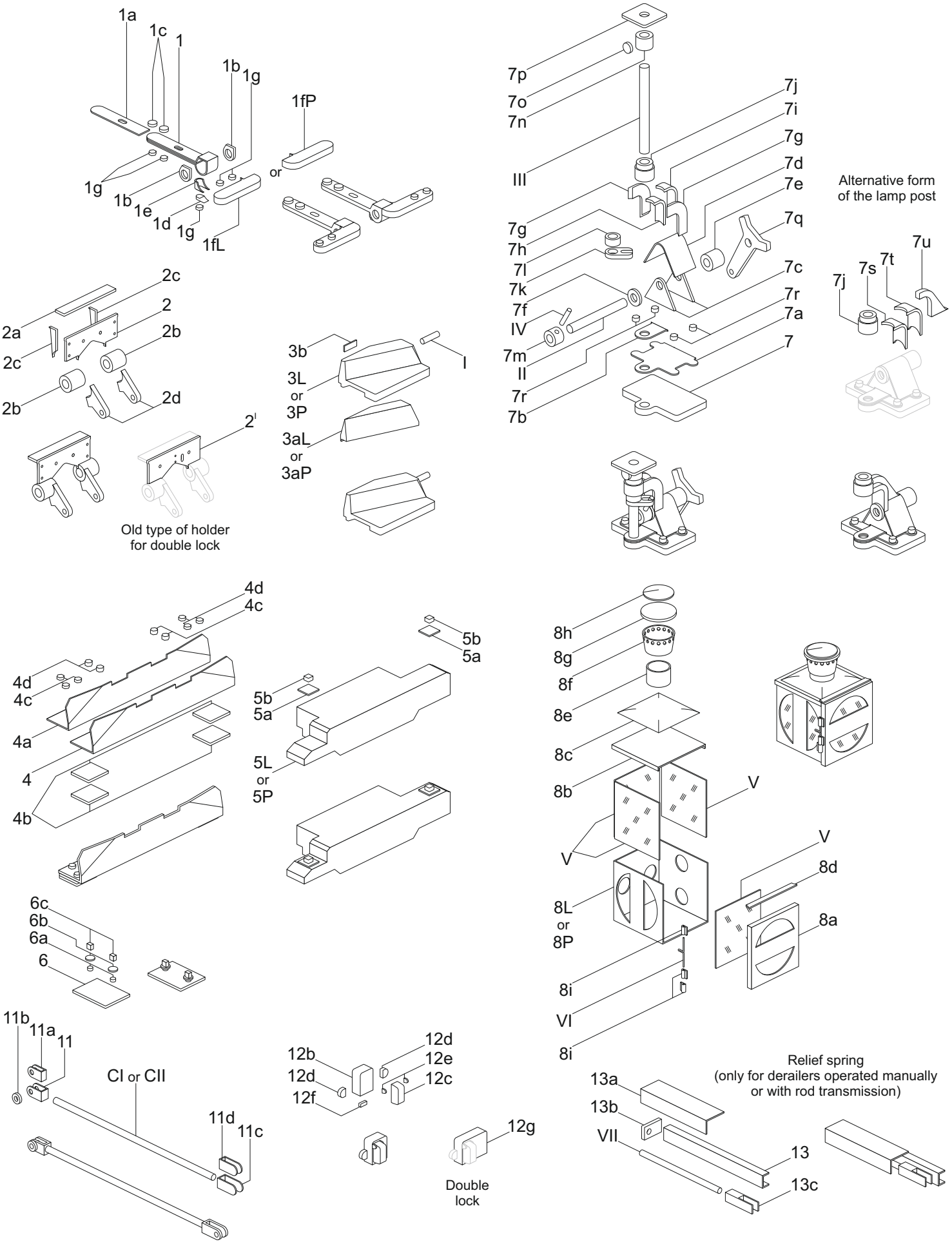

Derailer, scale 1:25

Assembly manual 1/6

Author: Paweł Adamowicz (http://pkprepo.net/), 2021, selected rights reserved BY-NC-ND

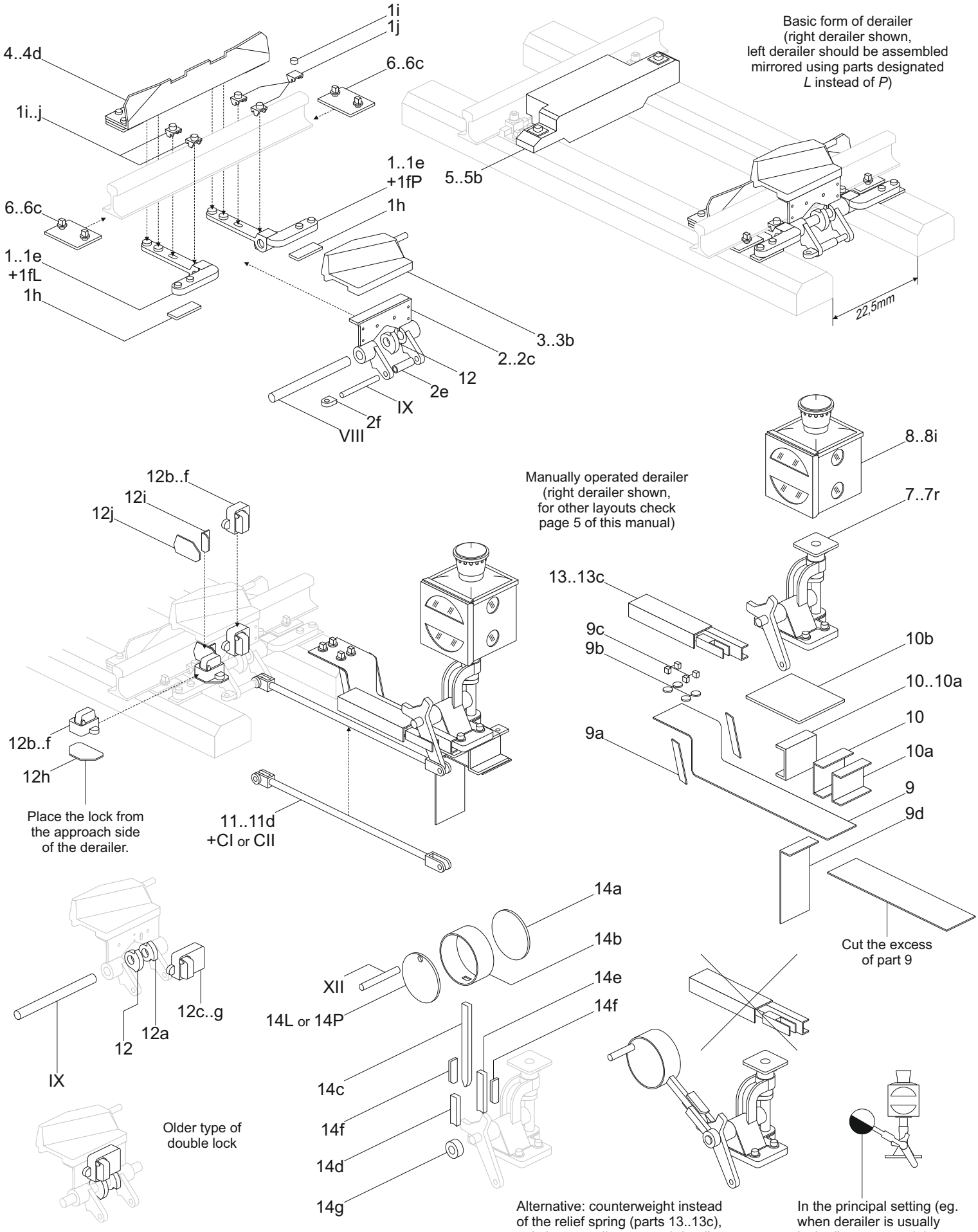

Derailer, scale 1:25

Assembly manual 2/6

Author: Paweł Adamowicz (http://pkprepo.net/), 2021, selected rights reserved BY-NC-ND

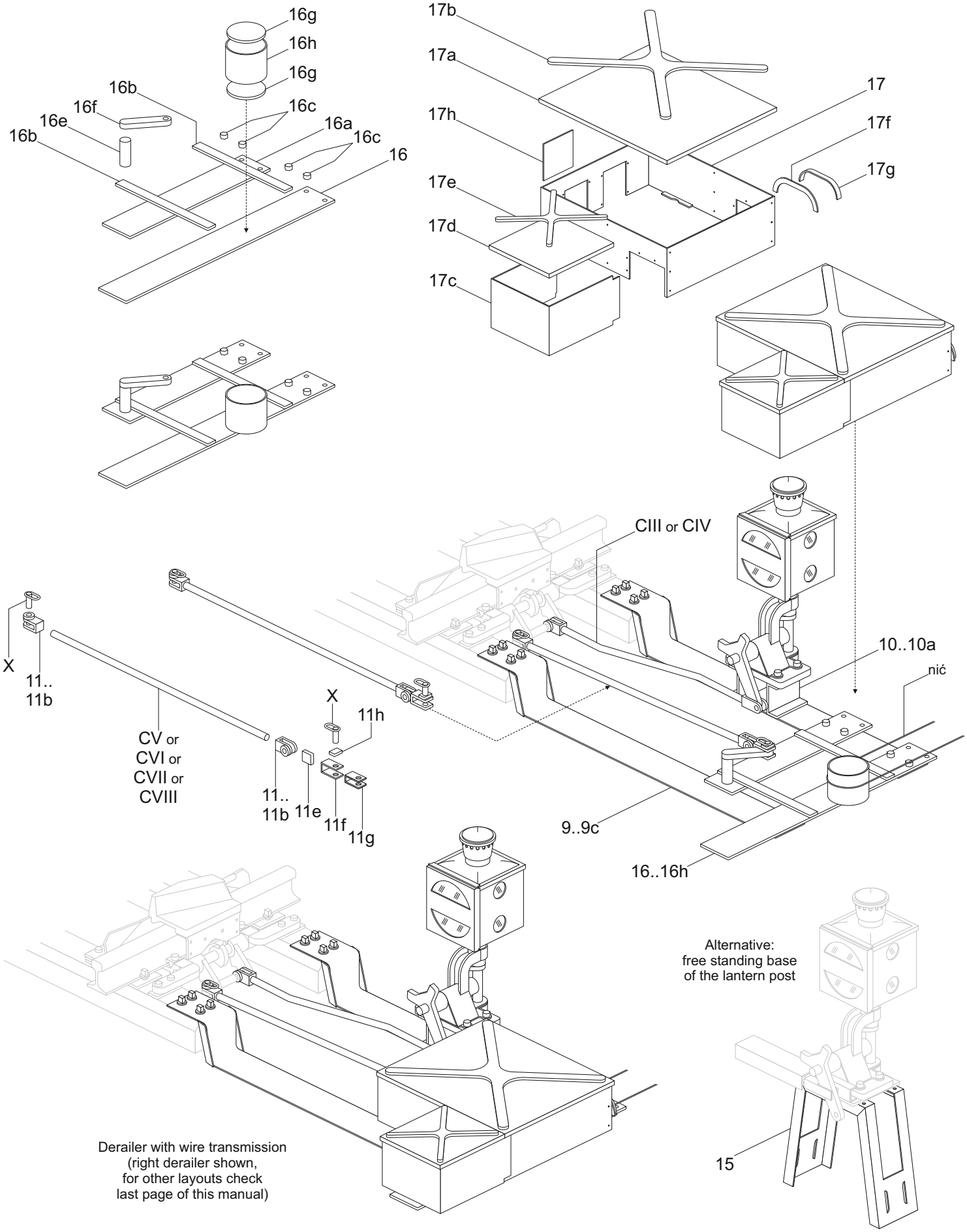

Derailer, scale 1:25

Assembly manual 3/6

Author: Paweł Adamowicz (http://pkprepo.net/), 2021, selected rights reserved BY-NC-ND

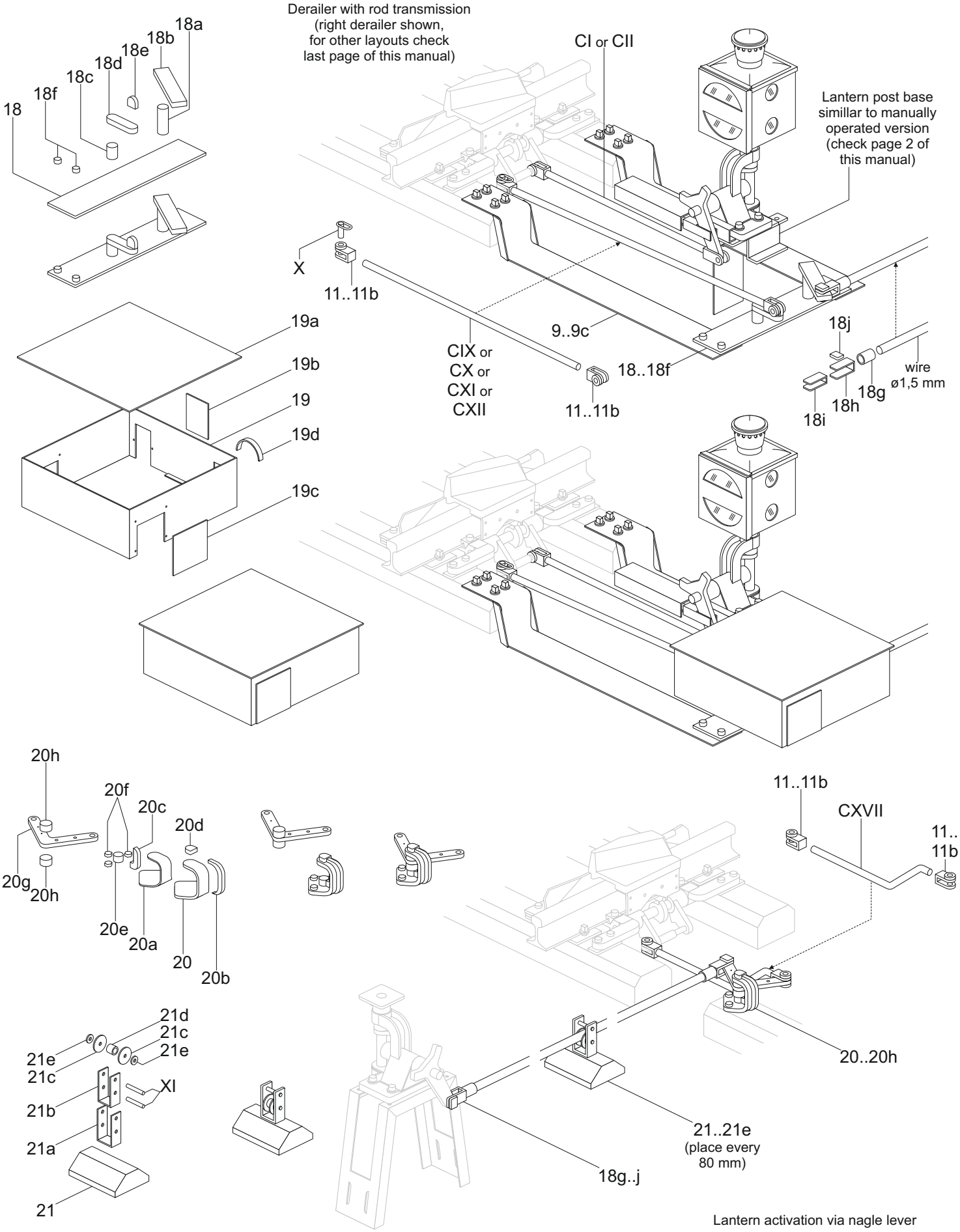

Derailer, scale 1:25

Assembly manual 4/6

Author: Paweł Adamowicz (http://pkprepo.net/), 2021, selected rights reserved BY-NC-ND

Manually operated derailers

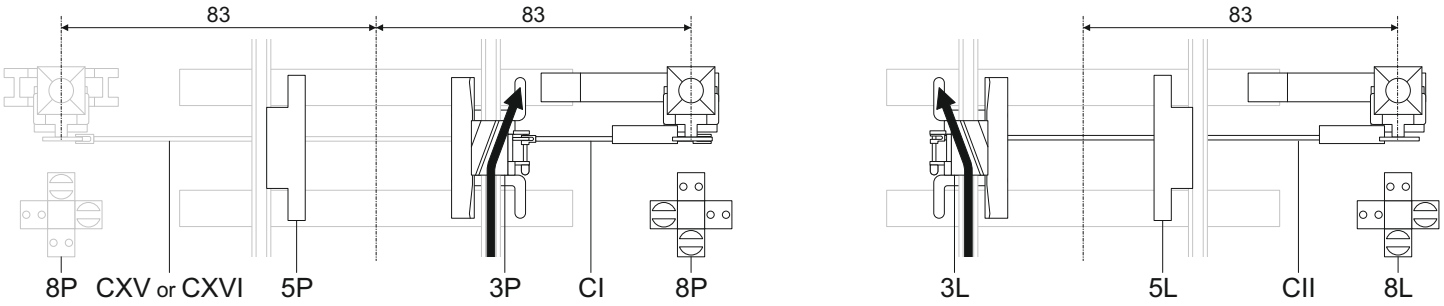

Left lantern present only for derailers which are not interlocked with other traffic eqipment.

Coupled derailers
(operated manually or with mechanical transmission)

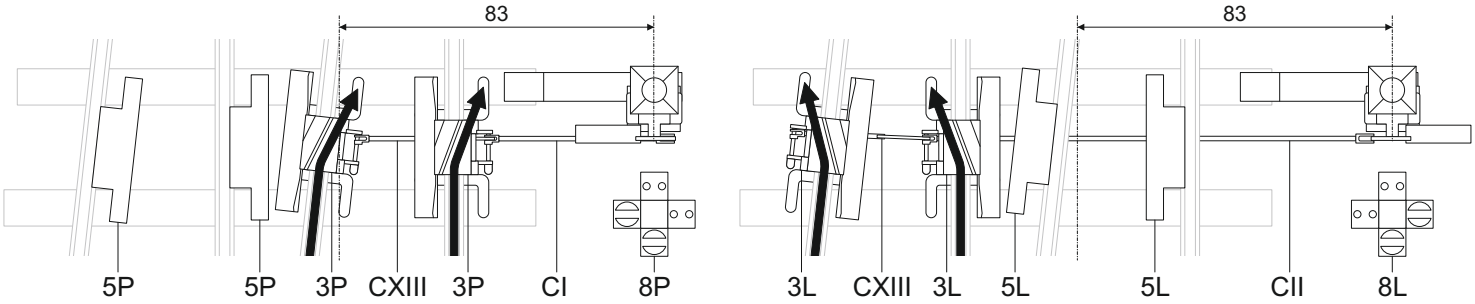

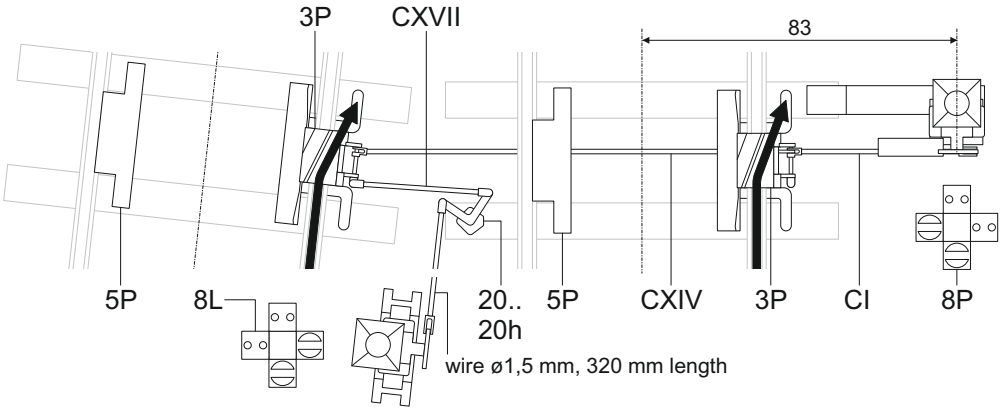

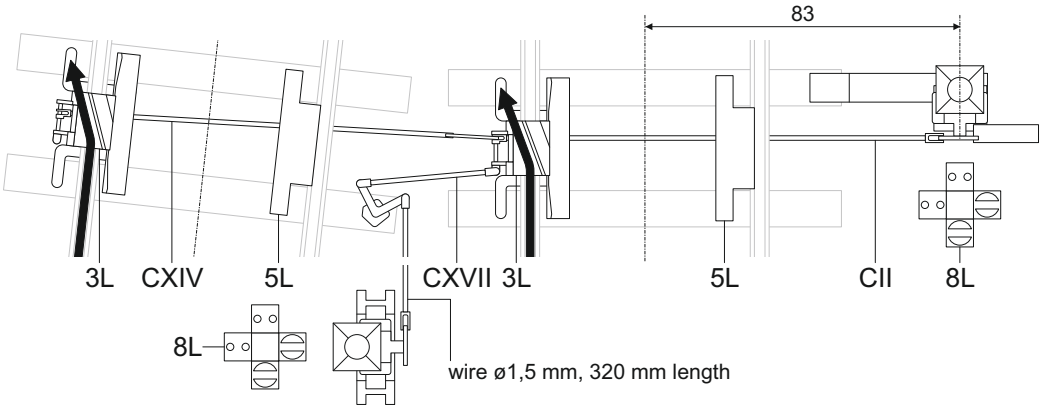

Derailer, scale 1:25

Assembly manual 5/6

Author: Paweł Adamowicz (http://pkprepo.net/), 2021, selected rights reserved BY-NC-ND

Single derailers with wire transmission

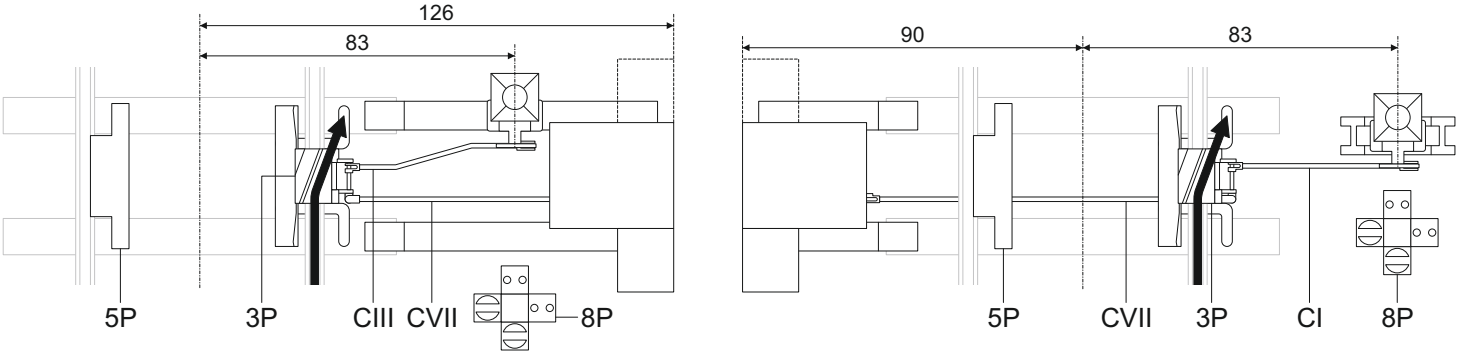

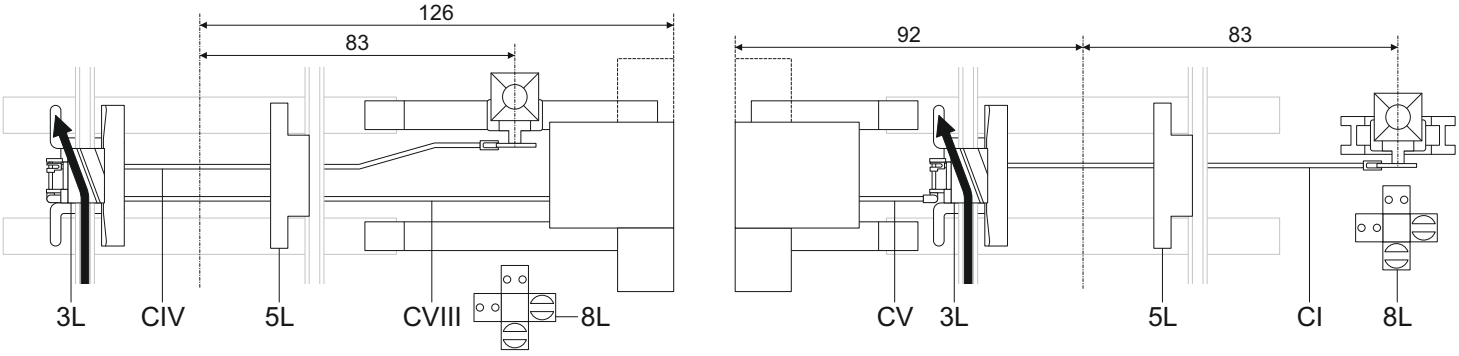

Single derailers with rod transmission

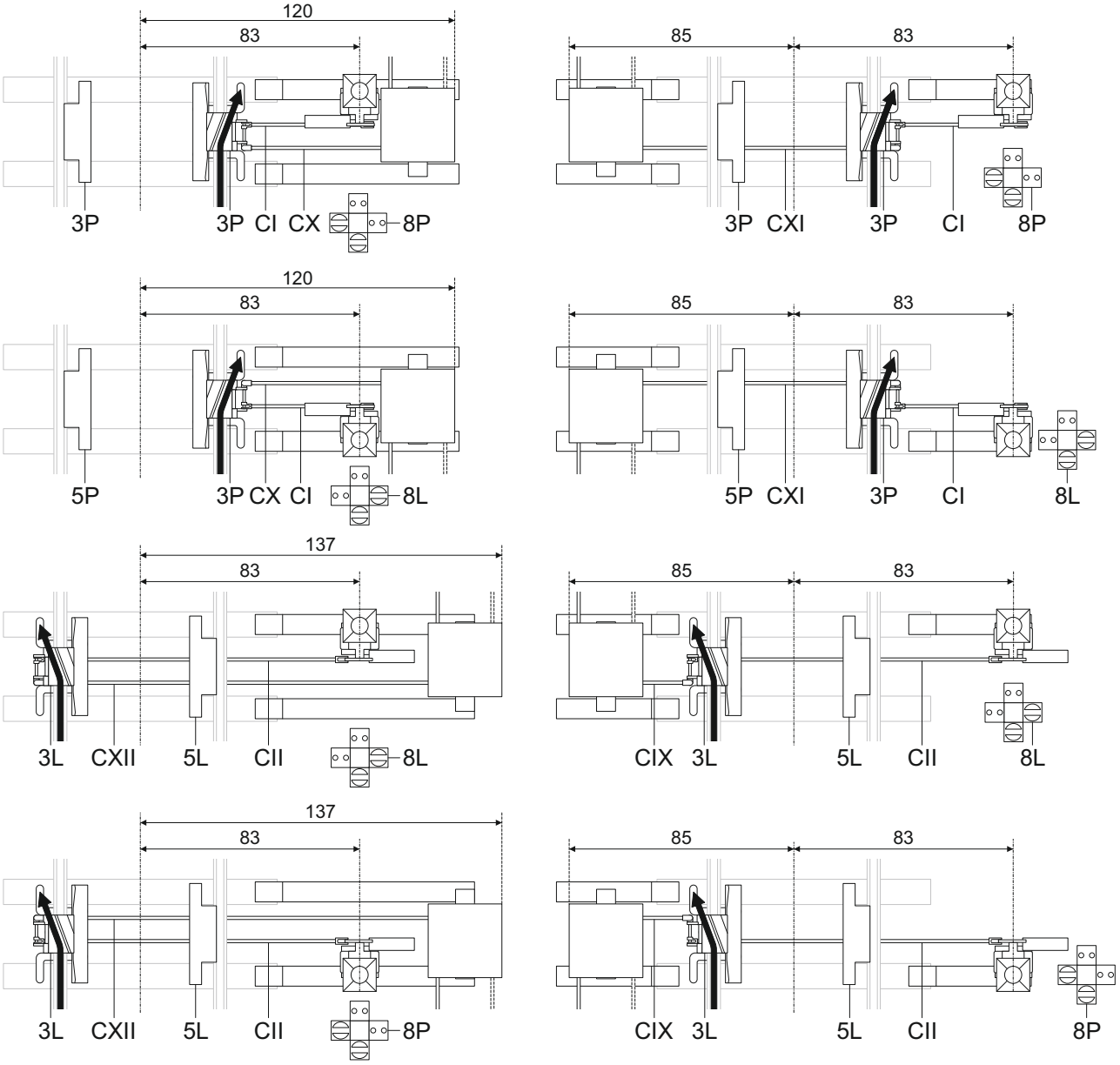

Derailer, scale 1:25

Assembly manual 6/6

Author: Paweł Adamowicz (http://pkprepo.net/), 2021, selected rights reserved
BY-NC-ND